Electrolux PROFESSIONAL

PROFESSIONAL LAUNDRY

lagoon® Advanced Care

Essential set

The perfect complement for any dry-cleaning operation

Features and benefits

Keep customers coming back
Outstanding results for garments of every type thanks to specialized detergents and dedicated programs

Delicate on the delicates
Gentle on fine textiles and wools labelled dry-clean only, as less mechanical action. Woolmark-approved

Rapid return on investment
With a better loading factor, less prespotting, easier finishing and faster process times

Sustainable and eco-friendly
Water-based cleaning with none of the disadvantages of PERC, which can be dangerous to staff

Dry to dry in 1 hour
Smart chemicals and processes mean garments are fully dried in the dryer - no hang-dry

Richard Jay
We know how

Electrolux PROFESSIONAL

Main specifications				WH6-6LAC	TD6-7LAC
Max. capacity	Laundry	filling factor 1:9	kg	6	-
	Wool	filling factor 1:15	kg	4	-
	Silk	filling factor 1:18	kg	3	-
Max. capacity	Drying	filling factor 1:18	kg	-	7
Drum,	volume		litre	53	130
	diameter		ø mm	452	575
Extraction			rpm	1450	-
G-factor				530	
Heating alternative		electricity	kW	4.4	5.1
Consumption data "lagoon 6W02CH"					
Total time	Wool High extraction		min	22	25
	Wool Medium extraction		min	23	-
	Silk		min	16	-
	Synth. mix Medium extract		min	20	-
	Synth. mix Low extract		min	17	-
	Curtains		min	-	-
Water consumption (cold+hot)					
	Wool High extraction		litre	26	-
	Wool Medium extraction		litre	25	-
	Silk		litre	25	-
	Synth. mix Medium extract		litre	26	-
	Synth. mix Low extract		litre	25	-
	Curtains		litre	-	-
Energy consumption (motor/heating/water)					
	Wool High extraction		kWh	0.05/0.25	-
	Wool Medium extraction		kWh	0.05/0.25	-
	Silk		kWh	0.05/0.2	-
	Synth. mix Medium extract		kWh	0.05/0.3	-
	Synth. mix Low extract		kWh	0.05/0.25	-
	Curtains		kWh	-	
Consumption data "Normal 60°C"					
Total time			min	50	31.0
Water consumption (cold+hot)			litre	29+10	-
Energy consumption (motor/heating/hot water)			kWh	0.2/0.15/0.6	3.23
Residual moisture			%	45	-
Evaporation			g/min	-	99
Energy/Water evaporation			kWh/l	-	1.06

Electrolux PROFESSIONAL

Electrical connections					
Heating alternative	Main voltage	Hz	Heating power kW	Total power kW	Recommended fuse A
Electric heated	230V 1PH + N+E*	50	2.2/2.8	2.4/3.0	16
	230V 1PH + N+E*	50	4.4	4.6	20
	400V 3PH + N+E*	50	4.4	4.6	10
	400V 3PH + N+E*	50	3.6	3.8	10
Non heated	400V 3PH + N+E*	50	-	0.5	10

*with a 5% tolerance range

Water connections		WH6-6LAC
Water valves	iinn	3/44
Water pressure	kPa	200-500
Capacity at 300 kPa	l/min	17
Drain valve	ø mm	50
Draining capacity	l/min	160
Liquid detergent supplies		5
Floor requirements		
Frequency of the dynamic force	Hz	24.2
Floor load at max extraction	kN	1.02 ± 0.3
Sound levels		
Sound power/pressure level at extraction*	dB(A)	70/56
Sound power/pressure level at wash*	dB(A)	56/42
Heat emission		
% of installed power, max		5
Shipping data**		
	net, kg	100
Shipping volume	crated, m^3	0.46
Accessories		
Stainless steel fluff collector		x
Stacking kit with tumble dryer		x
Steel base		x
Dimensions in mm		
A1 Width		595
A2 Width		735
B Depth		681
C Height		832
D1		284
D2		310
E		641
F		84
G		194
H		48
I		65
J		78
K		120
L		119
M		501
N		974
O		764

1	Operating panel	**6**	Drain valve
2	Detergent box	**7**	Drain pump
3	Door opening ø 255 mm	**8**	Electrical connection
4	Cold water	**9**	Payment system
5	Hot water		

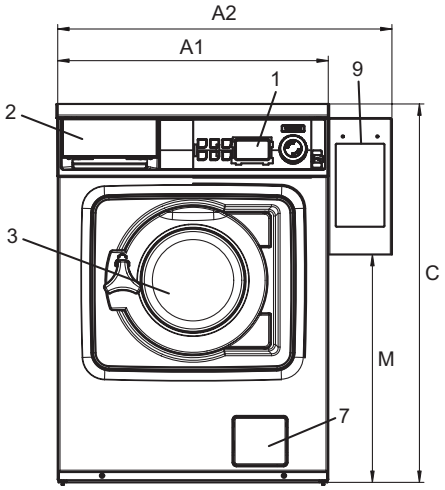

Front

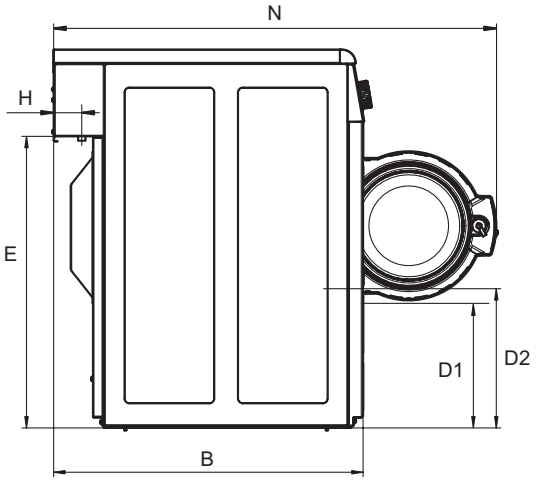

Side view

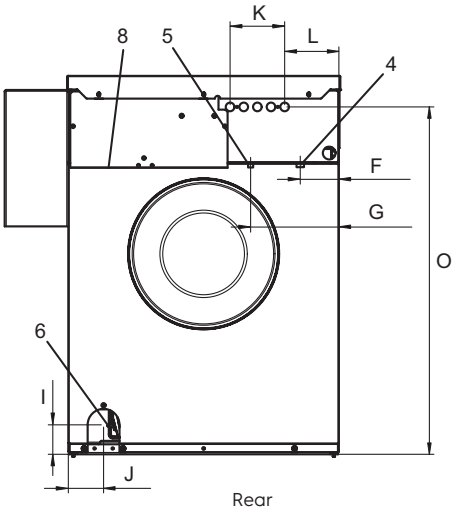

Rear

Front and side panels in metallic grey and dark blue

* Sound power levels measured according to ISO 60704.

** Average data. Crated weight/shipping volume depends on configuration. Please contact logistics for exact measures.

Electrolux PROFESSIONAL

Electrical connections					
Heating alternative	Main voltage	Hz	Heating power kW	Total power kW	Recommended fuse A
Heat pump	230 1PH + N+E**	50	*	2.3	10
	400 3PH + N+E**	50	*	2.3	10

* Total power and recommended fuse does not depend on the heating power in those cases.
**with a 5% tolerance range

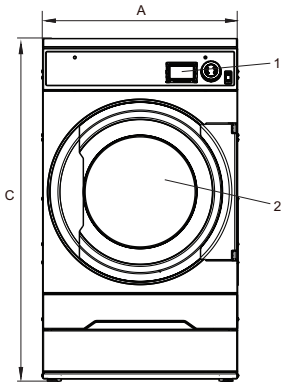

Front

Gas and air connections			TD6-7LAC
Gas		ISO 7/1-R	1/2"
Gas pressure			
	Natural gas	Pa	2000
		mbar	20
	Propane	Pa	2800-5000
		mbar	28-50
Air outlet		ø mm	125
Evacuated air,	el 3.0/4.5 kW	m^3/h	150
	6.0 kW	m^3/h	220
	gas 7.0 kW		280
Pressure drop	el 3.0/4.5 kW	Max. Pa	350
	6.0 kW	Max. Pa	270
	gas 7.0 kW		230
Sound levels			
Sound power/pressure level at drying*		dB(A)	63/48
Heat emission			
% of installed power, max			15
Shipping data**			
Weight		kg	109
Shipping volume		crated, m^3	0.81
Dimensions in mm			
A	Width		600
B(a)	Depth, el		845
B(b)	Depth, gas		877
C	Height		1050
D			582
E			384
F			296
G			79
H			50
I			98
J			118
K			90
L			522

1	Operating panel
2	Door opening ø 392 mm
3	Electrical connection
4	Exhaust connection
5	Gas connection

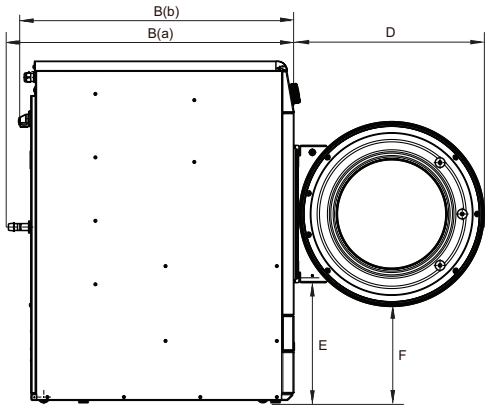

Left side

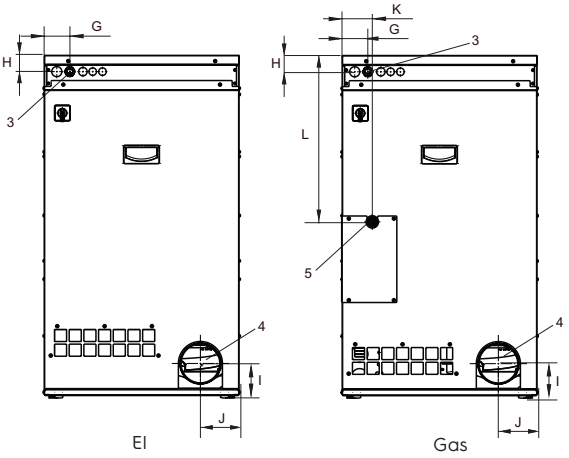

Rear side

* Sound power levels measured according to ISO 60704.
** Average data. Crated weight/shipping volume depends on configuration. Please contact logistics for exact measures.

Electrolux PROFESSIONAL

For more information about Efficient Dosing System please refer to the EDS Product Data Sheet

Efficient Dosing System	230V / 50Hz	115V / 60Hz
EDS complete kit with 2 pumps	988916901	988916911
EDS complete kit with 3 pumps	988916902	988916912
EDS complete kit with 4 pumps	988916903	988916913
EDS complete kit with 5 pumps	988916904	988916914
EDS complete kit with 6 pumps	988916935	988916915
EDS Controller	988916937	988916937
EDS 24V Interface	988916941	988916941

Low level alarm	
Power supply	230V AC 50/60Hz
Peak power absorbed	4W
Number of level sensor inputs	7 opto-isolated
Entry probes	Low voltage contact
Degree of protection	IP 65
Alarm output	Relay contact NA250V 8A max.

Description	PNC
Low level alarm	988916610
Low level probe	988916611
LLA & 2 probes	988916612
LLA & 3 probes	988916613
LLA & 4 probes	988916614
LLA & 5 probes	988916615
LLA & 6 probes	988916616

Electrolux name and description	Packaging 20 litres	Packaging 10 litres
W01 - lagoon Sensitive Detergent Professional detergent for natural/animal fiber	432731085	432731086
W03 - lagoon Sensitive Conditioner Professional conditioner for natural/animal fiber	432731087	432731088
W02 - lagoon Delicate Detergent Professional delicate universal detergent	432731089	432731090

For further information including spotting agents, please refer to the lagoon detergent Product Data Sheet

Electrolux PROFESSIONAL

BASE; open front and sides with wheels

Suitable for models: TD6-7LAC

988918477 Height: 370 mm
Material: Stainless steel

988918478 Height: 370 mm
Material: Galvanised, silver grey painted

BASE; closed front and sides

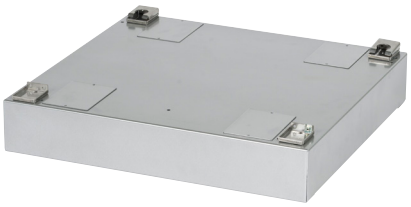

Suitable for models: WH6-6LAC

988918473 Height: 100 mm
Material: Stainless steel

988918474 Height: 100 mm
Material: Galvanised, silver grey painted

BASE; closed front and sides with wheels

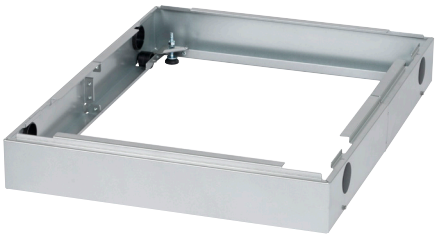

Suitable for models: TD6-7LAC

988918475 Height: 100 mm
Material: Stainless steel

988918476 Height: 100 mm
Material: Galvanised, silver grey painted

BASE; closed front and sides

Suitable for models: WH6-6LAC

988918483 Height: 290 mm
Material: Stainless steel front and galvanised, silver grey painted sides

988918484 Height: 290 mm
Material: Galvanised, silver grey painted front and sides

988918485 Height: 290 mm
Material: Stainless steel front and galvanised, silver grey painted sides
Special version "floating foundation" - concrete filled

988918486 Height: 290 mm
Material: Galvanised, silver grey painted front and sides
Special version "floating foundation" - concrete filled

STACKING KIT with or without base

Suitable for models: WH6-6LAC with TD6-7LAC

988918479 Stainless steel stacking kit without the base
988918480 Galvanised, silver grey painted stacking kit without the base
988918481 + 988918473 Stainless steel stacking kit with the base included
988918482 + 988918474 Galvanised, silver grey painted stacking with the base included
988918481 Stainless steel stacking kit, when re-using existing base
988918482 Galvanised, silver grey painted stacking, when re-using existing base

Art. No. 438913911EN/2019.08.29

Electrolux Industrial Washers – H Models – Installation Guideline

Foundations

The machine requires a foundation of solid and level concrete construction at least 100 mm deep. If a new concrete pad is to be laid it must be keyed correctly into the existing foundations. The concrete foundation should always be greater in size than the machine and a minimum of 100mm from the edge of the concrete foundation to the edge of the machine must be provided. A metal raising plinth can be used to raise the machine above the drain level for a correct evacuation of water from the machine if required. If block and beam or any other type of floor is present, seek advice.

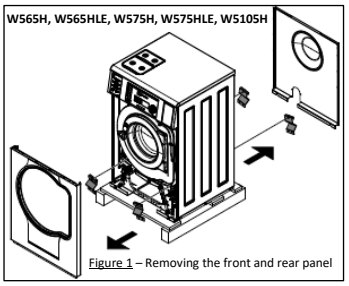

Figure 1 – Removing the front and rear panel

Fixings

A minimum service distance of 750mm is to be provided behind all machines, excluding WH6-6 / PW9C which don't require this service distance and can be moved during servicing.
All machines ship with 4 x feet and 2 x M10 expansion bolts (WH6-6 excluded), these need to be fitted and machine leveled with both nuts located on the feet in the up position.
Shipping brackets must be removed, failure to do this will result in serious damage to the appliance and place the user at high risk.

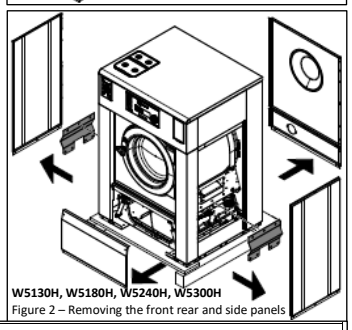

Figure 2 – Removing the front rear and side panels

Water Supply

The machine is supplied with two or three ¾ inch water inlet hoses, depending on the machine size, 1 or 2 cold and 1 x hot. All water intake connections to the machine should be fitted with manual shut-off valves and filters, to facilitate installation
and servicing. Water pipes and hoses should be flushed clean before installation. The machine must be connected with new water hoses, old hoses must not be re-used. Hoses should be an approved type and grade, and comply with IEC 61770. After installation hoses must hang in gentle arcs. All connectors present on the machine must be connected. A minimum supply pressure of 300 kPa and maximum supply pressure of 600 kPa is required. In hard water areas, above 150 PPM, it is recommended that the water supply is fitted with a water softener. Failure to do so will result in detrimental effect on some component parts and may affect the standard warranty.

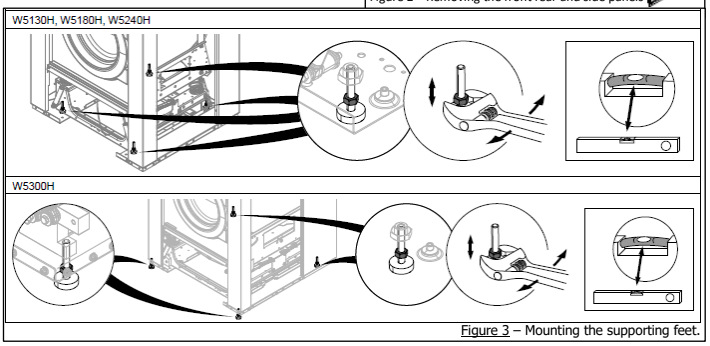

Figure 3 – Mounting the supporting feet.

If the hot water supply is insufficient in temperature, pressure or flow, the machine can then be connected solely to a cold water supply, however will lengthen cycle times. This can only be done if the machine is equipped with a heating source, i.e. electric elements or a steam supply.

Drainage

50mm stand pipe @ 1meter in height is needed for WH6-6 and PW9C. 50mm drain pipe at floor height is required for W5105H. All other machines require 75 mm drain pipe at floor level. This must ensure a downward flow from the machine. Avoid sharp bends which may prevent proper draining.

For gravity drain machines fitted with a drain valve, the drainage pipe should be located over a floor drain, drainage channel or the like so that the distance between the outlet and the drain is at least 25 mm.

Electrical

In instances where the machine is not equipped with an omni-polar switch, one must be installed beforehand. In accordance with the wiring rules: mount a multi-pole switch prior to the machine to facilitate installation and service operations. The connecting cable should hang in a gentle curve. When connecting to a terminal block, the connection cable shell must be stripped 10-11 mm. The cable area must be at least 0.5 mm2 and no more than 4 mm2.The terminal block used is a spring loaded cage clamp.
Each machine must be individually protected. The isolation point for the machine should be in a readily accessible position for use in an emergency. All cabling to the machine must be sufficiently protected against damage. It should be correctly sized to the current rating of the machine and be connected to the machine using a suitable cable entry fixing. Circuit breakers or fuses can be used to protect the power supply. If fuses are used, then they must be of the motor rated variety. A responsible and competent operative should carry out all electrical work and ensure that all local and national regulations and codes of practice are complied with.

Steam (Optional)

The machine should be connected to suitably sized live steam supply utilising an isolating valve, strainer/trap, electric solenoid inlet valve and a flexible steam connection hose. (Please note none of these fittings are supplied with the machine). All pipes should be lagged to protect against personal injury. All steam supply pipes should be installed to local and national codes of practice as they form part of a pressurised system.

NOTES:-

WHERE EXISTING SERVICES ARE TO BE CONNECTED TO, THE INSTALLER MUST ENSURE THAT THESE ARE ADEQUATELY SIZED AND THAT THEY ARE IN GOOD WORKING ORDER. FOR EXAMPLE, IF A WASHER IS TO BE CONNECTED TO AN EXISTING DRAIN IT MUST BE CHECKED FOR ANY BLOCKAGES DURING INSTALLATION.

FOR MULTIPLE MACHINE INSTALLATIONS SERVICES MUST BE INCREASED IN SIZE ACCORDINGLY. I.E WATER PIPES, DRAINAGE PIPES, ELECTRIC CABLES ETC.

All specifications subject to change without notice.
Installation Guideline is provided by
Richard Jay Pty Ltd www.richardjay.com.au

Electrolux Industrial Dryers – Installation Guideline

Foundations

- The machine should be sited on a firm level floor capable of withstanding its loaded weight.

Setup

- Two persons are recommended for the unpacking.
- The machine is bolted onto the transport pallet, remove the bolts between the machine and pallet. There are two bolts in the front of the machine and two in the back of the machine.
- The machine is delivered with supporting feet & must be levelled.
- The machine should be positioned so that there is plenty of room for working -(min. 500mm), both for the user and service personnel.

Electrical supply

- A competent installer must carry out all work. All work and materials must comply with local and national codes of practice.
- The machine must be installed using correctly sized cable (not provided)
- Each dryer must be provided with a separate isolation point, usually a fused switched outlet, with it's own circuit.
- Electrical connections are made inside the rear service box located at the upper left of the machine. Notice must be taken of the connection diagram.
- The isolator must be in an accessible position for emergency shut off.

Gas supply

- A qualified and competent person should carry out the installation of the gas supply. All gas work must be carried out by a registered AGA gas operative and must comply with all regulations relating to the installation.
- Ensure that the correct pressure is supplied to the dryer. Dependi6ng upon the type of gas used if the inline pressure exceeds that which is required a regulator should be fitted. If this is the case consult the supplier.
- The machine is designed to burn at a certain rate, known as the BTU rating of the appliance. To ensure that this rate is maintained the gas supply should remain constant. To achieve this the supply line must be of the correct size. Distance from the meter and other appliances on the same supply will have an effect on the pressure. Each dryer should have a gas isolation tap test gauge point, and restraining wire/chain
- The machine should be connected to a supply using a flexible armoured hose as vibrations could cause a solid connection to fracture. The hose may have union or bayonet connection points. A bayonet connector should not be used as an isolation point.

Exhaust

- All exhaust ductwork must be designed by a competent operative to ensure that the installation does not have any detrimental effect on dryer performance.
- The duct should follow the shortest possible route to atmosphere using the least number of bends possible and should be constructed of a smooth wall, rigid stainless steel or galvanised tubing. Flexible ducting must not be used.
- The diameter of the duct must never be reduced in size.
- If a common duct is to be used to vent a multiple dryer installation the diameter shall be increased to accommodate the cumulative effect of all dryers.
- Exhaust terminations may be hooded weather cowling (china hat) for vertical ducts or a downturn 90º elbow for horizontal. Louvres or grills may be used to prevent entry by foreign objects but consideration must be given to potential restrictions to air flow. When louvres and grills are used they must be in an accessible location for regular cleaning
- The exhaust should be properly sealed at all joints (no rivets).
- The exhaust air should not be vented into a wall, a ceiling, or a concealed space of building. Air must be vented outdoors.

Ventilation

- The dryer removes a large amount of air, while it is operating, from the room via the exhaust. Therefore, the air inside the room must be continually replenished with fresh air from atmosphere.
- If there is an imbalance between the air being pushed out to that which is being drawn in, there will be an adverse effect on the performance and operation of the dryer.
- Where louvres or grills are fitted then the size should be increased to achieve the correct size of free air space. Ventilation must be fixed and unrestricted. Ventilation should not be positioned within two metre of exhaust duct outlet. If more than one dryer is installed the opening can be increased to match their requirements; there is no need to make a separate opening.
- The area of the air inlet opening must be five times the size of the exhaust pipe area. The area of the inlet opening is the area through which the air can flow without resistance from the grating/slatted cover.

Static Back Pressure

- It is important to calibrate static back pressure according to ducting provided on site, this ensures optimal energy efficiencies and best performace.
- Adjust the dryer's damper by demounting the lower back panel and losening the screws. B in below image.
- Measure the pressure with an airflow meter by removing the NTC sensor (A) and testing the airflow, adjust the the damper until ideal pressure is reached per below table and taighten screws once achieved.

Model	Heating / Frequency	Static Back Pressure	Max Airflow
T5290	Electric / 50 Hz	400 Pa	550 m3/h
T5290	Gas / 50 Hz	400 Pa	610 m3/h
T5550	Electric / 50 Hz	650 Pa	940 m3/h
T5550	Gas / 50 Hz	650 Pa	940 m3/h
T5675	Electric / 50 Hz	500 Pa	1140 m3/h
T5675	Gas / 50 Hz	750 Pa	1140 m3/h

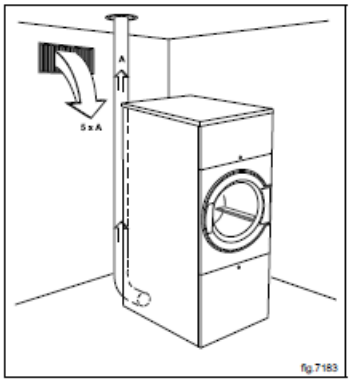

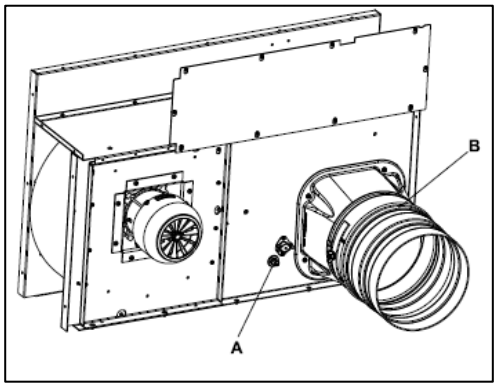

All specifications subject to change without notice.
Installation Guideline is provided by
Richard Jay Pty Ltd www.richardjay.com.au