JayWash

LG Front Load Dryer

LG Commercial Giant C+ RV1329A Coin-op

Platinum dryer exclusively from RJ

When it comes to energy efficiency and durability, LG Commercial dryers consistently perform brilliantly – living up to their motto that 'Life's Good'. As Australia's national importer of the LG Commercial laundry range, Richard Jay can guarantee that each model provides fresh and dry laundry results plus energy savings in every load.

When you partner with Richard Jay for laundry equipment, you can feel confident you're dealing with one of Australia's largest and most respected suppliers. Our family-owned business is the only B2B laundry provider with a truly national footprint.

LG Business Solutions

Features

- 10kg dryer for up to 25% more capacity
- Large front doors for easier loading
- Gas and electric dryers available
- Reversible door with heavy duty hinges
- Energy efficient design
- Stainless steel embossed drum for shorter drying times
- Extremely quiet operation
- Easy clean lint filter
- Easy to use programmable dry cycles for improved flexibility
- Programmable digital coin system
- Double security locks on coin vault
- Durable commercial construction

LG Front Load Dryer: LG Commercial Giant C+ RV1329A Coin-op

Cylinder	Gas	Electric
Drum Volume	207L	207 L
Diameter	663 mm	663 mm
Depth	570.6 mm	570.6 mm
Capacity	10.2 kg	10 kg

Dimensions		
Height	983 mm	983 mm
Width	686 mm	686 mm
Depth	764 mm	764 mm
Door Opening	126.4 mm	126.4 mm
Weight (net / gross)	59/65 kg	59/65 kg

Energy		
Dryer Motor	0.3 kw	0.3 kw
Gas Ratings	5.8 kw / 20,000 btu	
Heating Element (Electric)		4500 w
Electric Ratings V/Hz/A	220-240/50/2.4	220-240/50/22.5

Noise & Cycle Time		
Noise Level	< 62 dB	< 62 dB
Default Programme Duration	45 min	45 min

External Finish and Exhaust		
Drum	Stainless Steel	Stainless Steel
Top Plate	Painted Steel	Painted Steel
Air Outlet Diameter	100 mm	100 mm
Exhaust Airflow Diameter	100 mm	100 mm

Power Connection		
Power source	240V, 20 amp	240V, 20 amp

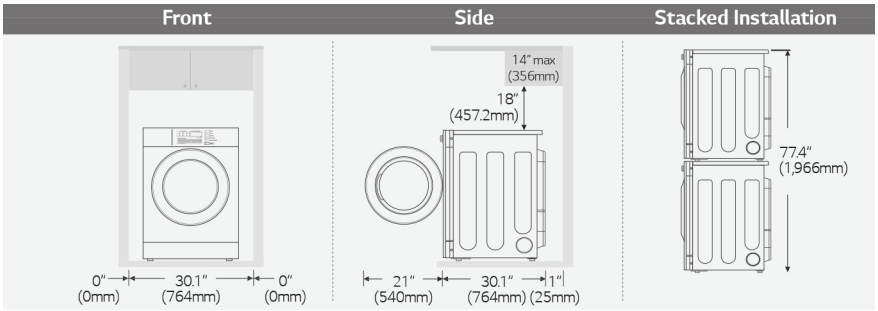

LG Business Solutions