Electrolux PROFESSIONAL

PROFESSIONAL LAUNDRY

Tumble dryer

T5290

Features and benefits

- Axial airflow and tight construction gives low energy consumption
- High productivity - 2 full loads per hour
- Large door opening for easy loading and unloading
- Easy and ergonomic access to the lint screen
- Excellent water evaporation efficiency per kWh
- The coin version with Ecopower to avoid over drying of the garments and get a lower energy consumption
- With Compass Pro program control
  - Large and clear display with control knob for easy program selection
  - Easy access with user-friendly interface
  - Language selection
  - Drying program packages optimized for Economy, Care and Time
  - Service program for adjustment of parameters
  - USB connection

Main options

- Stainless steel front
- Stainless steel drum
- Residual Moisture Control - RMC
- Connection to booking- /payment- system or coin meter
- Reversing drum
- Emergency stop button
- Supply disconnector

Accessories

- Fresh air intake
- Exhaust on top
- Insert for drying special equipment

Images shown are a representation of the product only and variations may occur.

Main specifications			T5290			
Rated capacity,	filling factor 1:18	kg/lb	16.1/35.5			
	filling factor 1:22	kg/lb	13.2/29.1			
Drum volume		litre	290			
Drum diameter		mm	680			
Heating alternatives						
	electric	kW	13.5/18			
	gas	BTU/h (kW)	71 700 (21)			
	steam at 600-700 kPa	kW	23			
Consumption data*			13.5 kW	18 kW	Gas	Steam
Total time at 13.2 kg		min	27	22	20	19
Energy consumption at 13.2 kg		kWh	6.33	6.37	7.01	9.04
Evaporation		g/min	244	303	328	348
Energy kWh/litre water evaporated		kWh/l	0.96	0.97	1.06	1.37

* At rated capacity 100% cotton load at 50% initial moisture dryed to 0%.

Certified in accordance with ISO 9001 and ISO 14001 and approved IP X4.

Richard Jay
We know how

Electrical connections*					
Heating alternative	Main voltage	Hz	Heating power kW	Total power kW	Recommended fuse A
Electric heated	220-230V 1 ~	50/60	13.5/18.0	14.2/18.7	63/100
	240V 1 ~	50/60	13.5/18.0	14.2/18.7	63/80
	220-240V 3 ~	50/60	13.5/18.0	14.5/19.0	50
	380-415V 3 ~	50/60	13.5/18.0	14.5/19.0	25/35
Gas heated/ Steam heated	220-240V 1 ~	50/60	-	0.7	10
	220-240V 3 ~	50/60	-	1.0	10
	380-415V 3 ~	50/60	-	1.0	10

Steam, gas and air connections			T5290
Steam		ISO 7/1-R	1"
Steam pressure		kPa	100-1000
Steam consumption		kg/h	65
Condensate		ISO 7/1-R	1"
Gas	NG/PG	ISO 7/1-R	1/2"
Gas pressure	Natural gas	Pa	2000
		mbar	20
	Propane	Pa	2800-3700
		mbar	28-37
Air outlet		ø mm	200
Maximum air flow:			
Electric 50 Hz / 60 Hz		m^3/h	550 / 550
Gas 50 Hz / 60 Hz		m^3/h	610 / 610
Steam 50 Hz / 60 Hz		m^3/h	690 / 690
Maximum static back pressure:			
Electric 50 Hz / 60 Hz		Pa	400 / 700
Gas 50 Hz / 60 Hz		Pa	400 / 700
Steam 50 Hz / 60 Hz		Pa	600 / 1100
Sound levels			
Airborne sound level		dB(A)	<70
Heat emission			
% of installed power, max			15
Shipping data**			
		net, kg	189
Shipping volume		crated, m^3	1.74
Dimensions in mm			
A	Width		713
B(a)	Depth		1210
B(b)	Depth		1358
C	Height		1688
D			741
E			790
F			53
G			70
H			367
I			295
J			166
K			142
L			357
M			605
N			694
O			673

1 Control panel
2 Door opening ø 580 mm
3 Electrical connection
4 Gas connection
5 Exhaust connection
6 Condensate connection
7 Steam connection
8 Lint screen

* Other voltages available, see installation manual.

** Average data. Crated weight/shipping volume depends on configuration. Please contact logistics for exact measures.

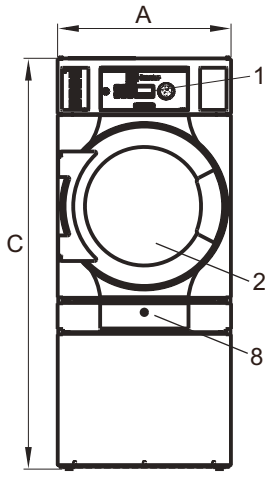

Front

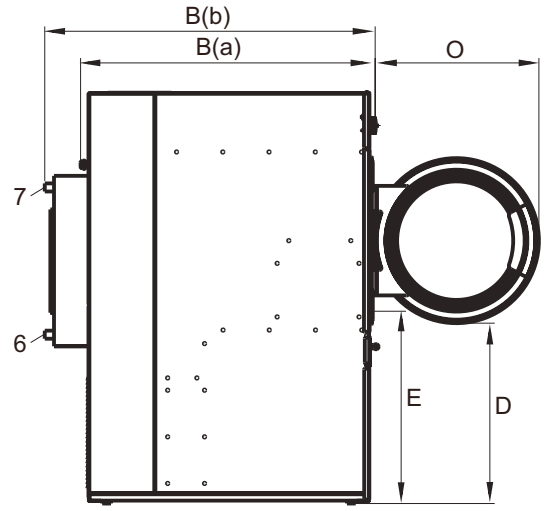

Left side

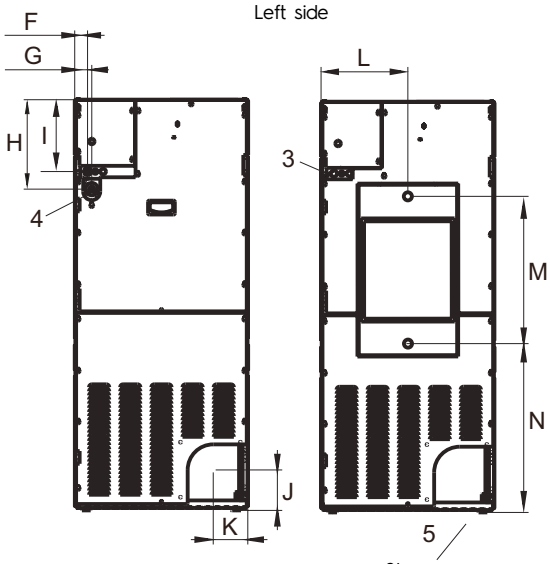

El, gas Rear side Steam

Art. No. 438913761/2015.01.14
We reserve the right to alter specifications without notice.

Richard Jay
We know how
BRISBANE - SYDNEY - MELBOURNE - ADELAIDE - PERTH
1300 RICHARD (742 427) - www.richardjay.com.au
A family owned Australian business
est. 1969

PRODUCT INSTALLATION SPECIFICATIONS	MODEL	T5290
CAPACITY – kgs	filling factor 1:18	16.1
HEIGHT – mms		1688
WIDTH – mms		713
DEPTH – mms		1210 *Steam model 1358
SPACE REQUIRED AROUND MACHINE – mms		150 Above 10 Sides 500 Behind
APPROX.WEIGHT – kgs		189
LEGS		FREE STAND
HEIGHT UNDER DOOR OPENING – mms		790
GAS CONNECTION – inches (dryer fitting is male) Regulated gas supply with isolation valve required.		1/2
GAS RATING – Megajoules		76 MJ
NATURAL GAS PRESSURE REQUIRED.		1.13 kPa
LPG GAS PRESSURE REQUIRED.		2.75 kPa
DUCT SIZE – inches (single skin round galv. outlet). The dryer is pre-set for optimal air flow with up to 15 m equivalent pipe length. For longer pipes it is necessary to adjust the dryer according to the Manufacturers instructions within allowable limits.		200 mm
MAKE UP AIR OPENING REQUIRED (to outside). For maximum efficiency and the shortest possible drying time, it is important to ensure that fresh air is able to enter the room from the outside in the same volume as that blown out of the room. To avoid draught in the room it is important to place the air inlet behind the machine. The area of the air inlet opening is recommended to be five times the size of the exhaust pipe area. Note! Gratings/slatted covers often block half of the total fresh air vent area. Remember to take this into account. The area of the inlet opening is the area through which the air can flow without resistance from the grating/slatted cover.	**Recommended area of fresh air intake**	0.16 m^2
MAXIMUM AIR FLOW:	**Electric - m^3/h** **Gas - m^3/h** **Steam - m^3/h**	550 610 690
MAXIMUM STATIC BACK PRESSURE: Measured 1mt from exhaust outlet.	**Electric - Pa** **Gas - Pa** **Steam - Pa**	400 400 600
POWER CONNECTION – GAS/STEAM HEATED	**3-pin GPO required.**	1 phase, 240v, 10amp GPO
CIRCUIT PROTECTION AMPS – GAS/STEAM HEATED		16
STEAM HEAT	**Regulated steam supply with isolation valve required.**	
- Connection – inches (1 x steam input & 1 x condensate outlet)		2 x 1inch
- Required pressure – kPa		100-1000
- Steam Consumption Kg/Hr		65
POWER CONNECTION - WITH ELEC.HEAT	**3-phase hard wire isolator required.**	3 phase, 415v, hard wired
CIRCUIT PROTECTION AMPS - WITH ELEC. HEATING		35
NOISE LEVEL – Maximum dba		70

* Customer supplied services must be located within 1 metre of each service connection point on machine for standard fittings to reach. See machine drawing for locations.

This work is protected by copyright. Reproduction in whole or in part, in 2 or 3 dimensions is expressly forbidden except with the prior written permission of the copyright owner. © Richard Jay Laundry Equipment Pty Ltd.